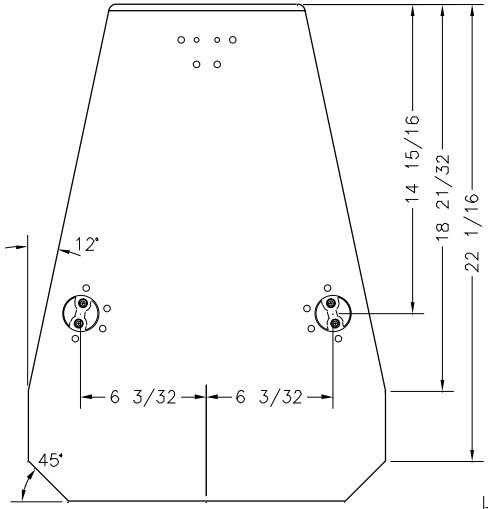

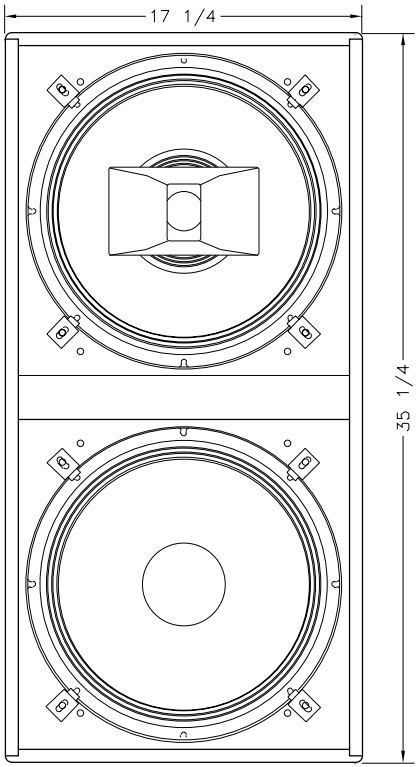

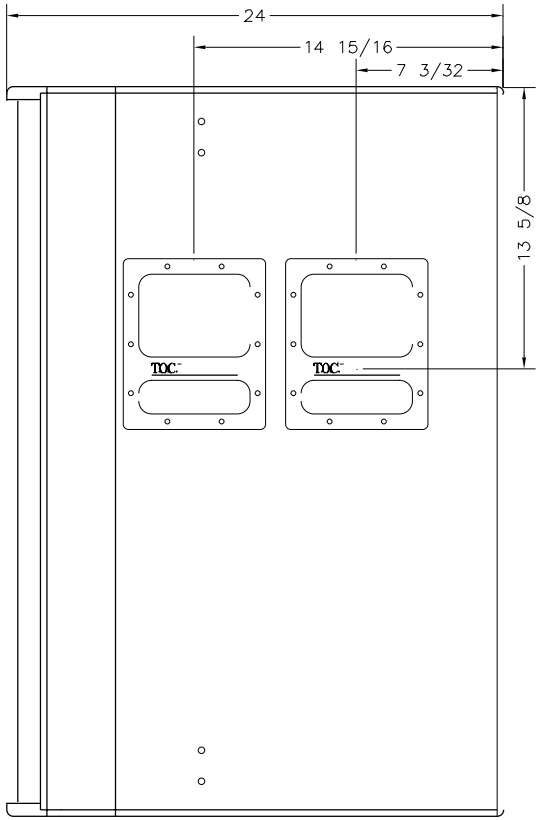

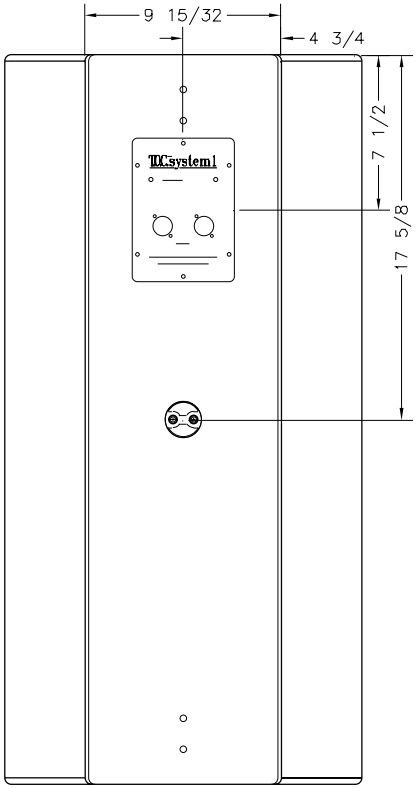

NO.	REVISION	DATE	BY	ISSUED FOR	DATE	BY

UNLESS OTHERWISE SPECIFIED DIMENSIONS ARE IN INCHES
TOLERANCES
DECIMAL .XX ±.03 .XXX ±.010 ANGULAR ±0.5°
DO NOT SCALE DRAWING
SIZE D
FRACTIONAL ± 1/64 [METRIC] [± 0.25mm]
REVISION DATE:
LAST PLOT DATE:
CAD FILENAME: RS-2.2

RS-2.2 CABINET

SCALE: 1:3	DATE 07/09/96	DWG. NO. RS-22	REV. A
DRAWN BY: A.S.			
CHECKED			
APPROVED			

PROFESSIONAL AUDIO SYSTEMS
2270 COSMOS COURT
CARLSBAD, CA 92009
(760) 431-9924 FAX: (760) 431-9496